Lighting Services Inc

CONTROLTrack

SURFACE CONTROLTrack • SPECIFICATIONS

GENERAL CONTROLTrack shall allow fixtures to be located anywhere along the track length. Fixtures shall be easily focused, switched, dimmed, accessorized and removed as desired. Track system shall have a twelve year warranty from date of shipment.

MECHANICAL Lighting Track shall be constructed of .070 (2mm) extruded aluminum with overall height of 1.42 (36mm) and overall width of 1.812 (46mm). Track shall have same overall dimensions and physical appearance for both one and two circuit models.

Track shall be available in nominal 4 foot (1.2m), 8 foot (2.4m), and 12 foot (3.7m) lengths, in Silver, Black, and White high temperature baked paint finish. Track shall be field cuttable to any length with a single flush cut.

Track system shall be available with End Feed, End Cap, Straight Mini-Joiner, and Straight Joiner/Feeder as standard components.

Track shall have the ability to be directly surface mounted. Track shall have pre-punched mounting slots for direct mounting to any surface. Track shall have the ability to: be mounted 1/2 inch (13mm) from a surface by extruded aluminum mounting clips, be suspended from a surface by a field cuttable stainless steel cable system, be suspended from a surface by a field cuttable steel stem system, and be mounted into UniTrack/Gemini housing.

ELECTRICAL Lighting Track and components shall be ETL listed, CE Certified, and comply with the National Electric Code standards for Lighting Track. One and two circuit Lighting Track shall be rated for 120/250V or 277V at 50/60 Hz. 20 amp maximum each circuit. Each circuit shall be comprised of flat copper busbars and have a separate neutral busbar for each circuit. **Track shall have integral wiring channels for four (4) additional #12 THHN wire. This shall allow the creation of two (2) additional 20 amp circuits, which can be dropped into any Joiner/Feeder, for a total track power capacity of 80 amps.** All busbars shall be insulated to prevent contact with aluminum extrusion.

Track shall have electric feed capability through all Joiner/Feeders (except Mini-Joiner) using either ½" or ¾" U.S. trade size knock-outs (.875 diameter [22mm] or 1.125 diameter [29mm]). All Joiner/Feeder circuits can be easily field modified by changing connector locations. All Joiner/Feeders shall be available in Black, White, and Silver GE fiber reinforced Lexan

One and two circuit Lighting Track with separate neutral busbars shall have the ability to have each circuit separately dimmed as required when using standard voltage and low voltage fixtures with either magnetic or electronic transformers. Track shall have the ability to be dimmed or switched in selected sections in addition to dimming or switching an entire track configuration or track run.

One circuit CONTROLTrack shall have one set of AC busbars and an additional 3 flat copper busbars equivalent to 14 AWG wire. Shall allow for the use with low voltage data communication to control fixtures connected to track. Protocols include DMX, Dali, Lutron Ecosystem and two zones of 0-10V control.

FIXTURE FITTING INTERFACE Track shall accept GE fiber reinforced Lexan™ fixture fittings which positively lock into track and cannot be energized by the integral switch until safety interlock handle is in the closed position. Safety interlock shall also prevent fixture fitting removal from track unless the switch is in the "off" position. Upon insertion of fixture fitting into track, grounding connection from fixture fitting to track shall be automatically completed before any electrical contact is made with busbars. When removing fixture fitting from track, the grounding connection shall automatically be disconnected last. The fixture fitting shall recess into the track, creating a minimal profile below the track. Fixture fitting shall not allow connection of data circuit to high voltage supply.

One Ckt 120/250V Track

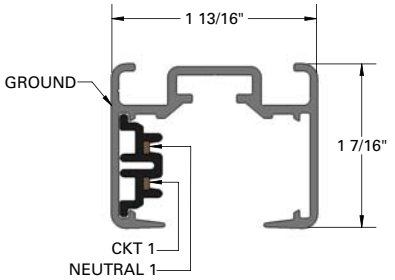

One Ckt 120/250V CONTROLTrack

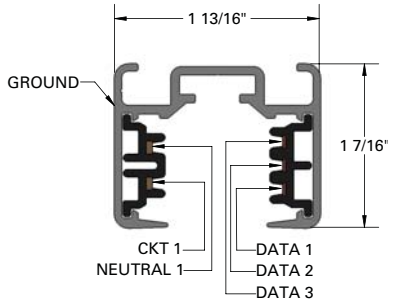

Two Ckt 120/250V Track

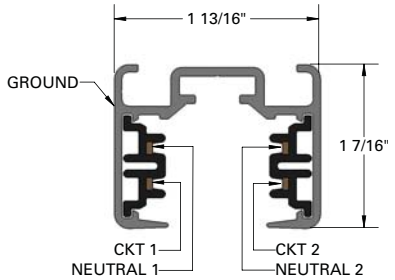

SURFACE CONTROLTrack • CONFIGURATIONS

Straight Run Application (One/Two Circuit and CONTROLTrack)

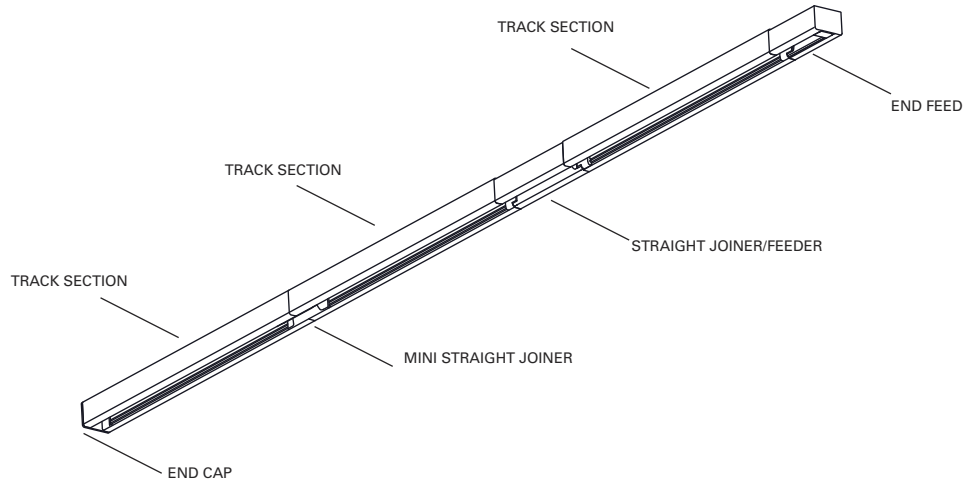

BridgeTrack Application (One Circuit and One Circuit CONTROLTrack)

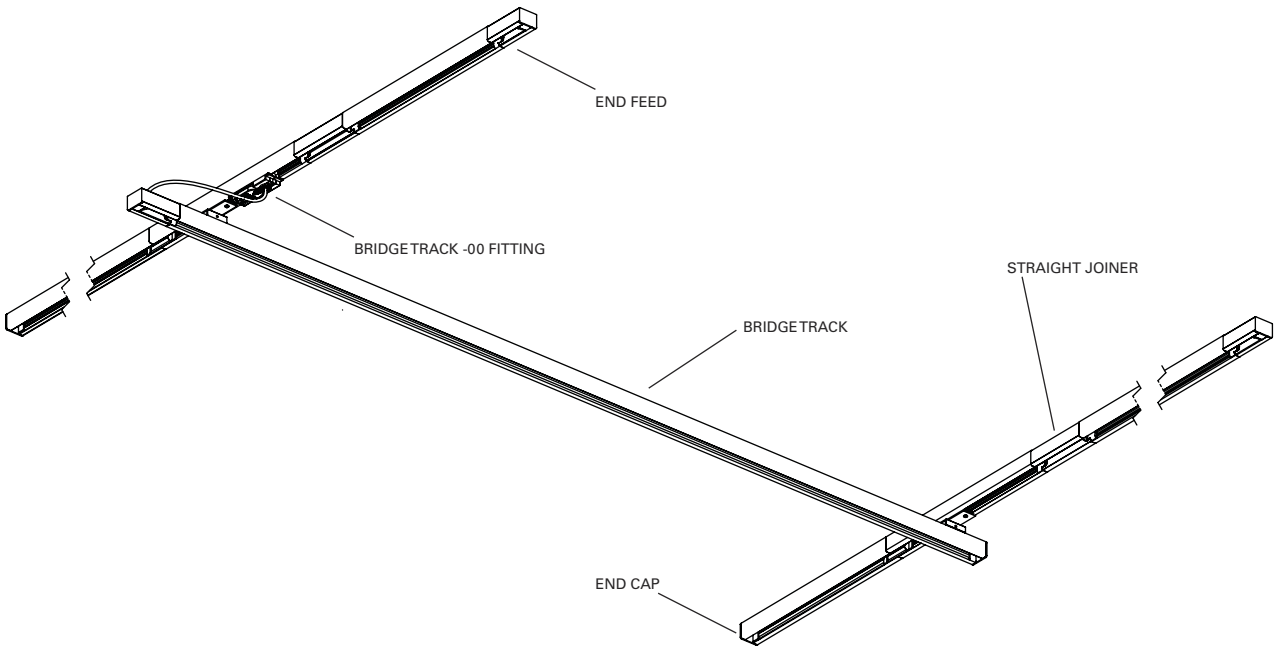

SURFACE CONTROLTrack • COMPONENTS

Key Features / Applications

ETL listed, Dry Location • IBEW union made at LSI plant in USA • Specification grade heavy duty .070 (2mm) extruded aluminum track • 4 foot (1.2m), 8 foot (2.4m) and 12 foot (3.7m) field cuttable lengths • One circuit 20 amp or two circuit 40 amp capacity/120/250 volt • 100 amp total capacity when using integral wireways • Copper busbars equivalent to #12 AWG wire used as circuit • Separate neutral track conductor used for each circuit • Black, White, and Silver finishes • All Joiner/Feeders, Mini-Joiners, End Feeds and End Caps are injection molded of GE fiber reinforced Lexan™ • All Joiner/Feeders are easily wired via plug-in connector system • All Joiner/Feeder circuits can be easily field modified by changing connector locations • Fixture fitting recesses into track for minimum profile • LSI surface track can be mounted directly to any surface at least 5'-0" above finished floor.

Surface Track Sections

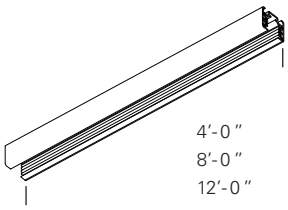

Surface Track Sections are used in conjunction with an end feed, end cap and a variety of Joiner/Feeders to form track runs and configurations. Track section lengths are actual 4 foot (1.2m), 8 foot (2.4m), and 12 foot (3.7m) which are field cuttable.

	Part Number
One Circuit	**TRK-SP-XX1-YYYZ**
Two Circuit	**TRK-SP-XX2-YYYZ**
One Circuit Control	**TRK-SC-XX1-YYYZ**

XX=Length	YYY=Voltage	Z=Paint Color
☐ **04**=4ft Track	☐ **120**=120V	☐ **B**=Black
☐ **08**=8ft Track	☐ **230**=220V-240V	☐ **W**=White
☐ **12**=12ft Track	☐ **277**=277V	☐ **S**=Silver

Bridge Track

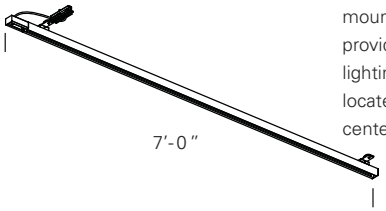

Bridge Track (7 feet) is a complete, portable, field cuttable, surface track system that mechanically and electrically mounts to and spans parallel runs of LSI track. Bridge Track provides an additional range of striking angles for track lighting fixtures or for centering a fixture over a target located between parallel runs of track up to 6 foot (1.8m) on center.

	Part Number
One Circuit	**TRK-SP-BT1-YYYZ**
One Circuit Control	**TRK-SC-BT1-YYYZ**

YYY=Voltage	Z=Paint Color
☐ **120**=120V	☐ **B**=Black
☐ **230**=220V-240V	☐ **W**=White
☐ **277**=277V	☐ **S**=Silver

End Feed

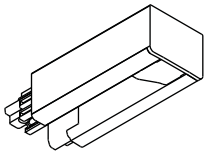

End Feed is used in conjunction with a Canopy Kit for top feeding from a recessed outlet box and can also be top fed directly with cable. CONTROLTrack feeds may be used for either power or control.*

	Part Number
One Circuit, Left	**TRK-SP-EF1L-YYYZ**
One Circuit, Right	**TRK-SP-EF1R-YYYZ**
Two Circuit	**TRK-SP-EF2-YYYZ**
One Circuit Control, Left	**TRK-SC-EF1L-YYYZ**
One Circuit Control, Right	**TRK-SC-EF1R-YYYZ**

YYY=Voltage	Z=Paint Color
☐ **120**=120V	☐ **B**=Black
☐ **230**=220V-240V	☐ **W**=White
☐ **277**=277V	☐ **S**=Silver

End Feed for Conduit Connector

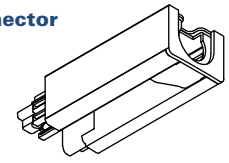

End Feed for Conduit Connector is used when feeding directly into the end of an End Feed. Connector supplied with 1/2" US trade size hole (.875 diameter [22mm]). CONTROLTrack feeds may be used for either power or control.*

	Part Number
One Circuit, Left	**TRK-SP-EFC1L-YYYZ**
One Circuit, Right	**TRK-SP-EFC1R-YYYZ**
Two Circuit	**TRK-SP-EFC2-YYYZ**
One Circuit Control, Left	**TRK-SC-EFC1L-YYYZ**
One Circuit Control, Right	**TRK-SC-EFC1R-YYYZ**

YYY=Voltage	Z=Paint Color
☐ **120**=120V	☐ **B**=Black
☐ **230**=220V-240V	☐ **W**=White
☐ **277**=277V	☐ **S**=Silver

*Due to the possibilities of electronic interference, it is recommended to feed power and control from opposite ends of a track run, but may be fed from one end providing that armored/shielded cable is used.

SURFACE CONTROLTrack • COMPONENTS

Portable Feed

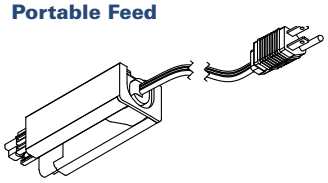

Portable Feed is used when a portable or temporary track hookup is desired. Supplied with 15 foot #16 AWG-10 Amp/125 Volt 3 wire flexible cord with NEMA 5-15P grounding plug.

	Part Number
One Circuit, Left	**TRK-SP-EFP1L-120Z**
One Circuit, Right	**TRK-SP-EFP1R-120Z**

Z=Paint Color
☐ **B**=Black
☐ **W**=White
☐ **S**=Silver

Straight Joiner/Feeder

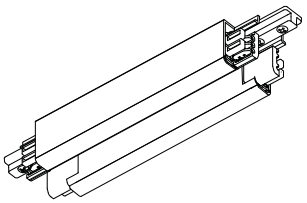

Straight Joiner/Feeder is used to mechanically and electrically couple any two lengths of track in a straight line. Straight Joiner/Feeder can also be top fed to energize the track from a recessed junction box when used in conjunction with appropriate Canopy Kit or can be top fed directly with cable or conduit. CONTROLTrack feeds may be used for either power or control.*

	Part Number
One Circuit	**TRK-SP-SJ1-YYYZ**
Two Circuit	**TRK-SP-SJ2-YYYZ**
One Circuit Control	**TRK-SC-SJ1-YYYZ**

YYY=Voltage
☐ **120**=120V
☐ **230**=220V-240V
☐ **277**=277V

Z=Paint Color
☐ **B**=Black
☐ **W**=White
☐ **S**=Silver

Straight Mini-Joiner

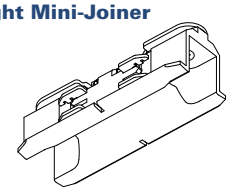

Straight Mini-Joiner is used to mechanically and electrically couple any two lengths of track in a straight line. Not for use as feeder.

	Part Number
One Circuit	**TRK-SP-MJ1-YYY**
Two Circuit	**TRK-SP-MJ2-YYY**
One Circuit Control	**TRK-SC-MJ1-YYY**

YYY=Voltage
☐ **120**=120V
☐ **230**=220V-240V
☐ **277**=277V

End Feed Terminator

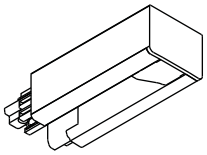

Terminates the end of a DMX run with a 120 ohm resistor. Installed on the end of the track. See DMX guidelines for more info. Power can be fed into this feed.

	Part Number
One Circuit Control, Left	**TRK-SC-EFT1L-YYYZ**
One Circuit Control, Right	**TRK-SC-EFT1R-YYYZ**

YYY=Voltage
☐ **120**=120V
☐ **230**=220V-240V
☐ **277**=277V

Z=Paint Color
☐ **B**=Black
☐ **W**=White
☐ **S**=Silver

Connector DMX Terminator

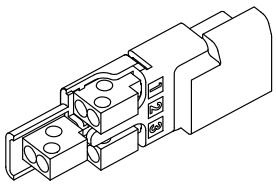

Terminates the end of a DMX run with a 120 ohm resistor. Installed in a feed section. See DMX guidelines for more info.

	Part Number
One Circuit Control, Left	**TRK-AC-CT1L**
One Circuit Control, Right	**TRK-AC-CT1R**

End Cap

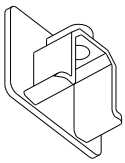

End Cap is used for mechanically ending any straight run, individual Track Section, or open configuration Track Section.

	Part Number
All Circuits	**TRK-S-AC-EC-Z**

Z=Paint Color
☐ **B**=Black
☐ **W**=White
☐ **S**=Silver

*Due to the possibilities of electronic interference, it is recommended to feed power and control from opposite ends of a track run, but may be fed from one end providing that armored/shielded cable is used.

SURFACE CONTROLTrack • COMPONENTS

Current Limiter

LSI Track Current Limiters integrate directly into one to two circuit runs. If using CONTROLTrack, data needs to be fed at another location. Available in the following amperages: 0.5 AMP (60 Watts), 1 AMP (120 Watts), 1.5 AMP (180 Watts), 2 AMP (240 Watts), 2.5 AMP (300 Watts), 3 AMP (360 Watts), 5 AMP (600 Watts), 8 AMP (960 Watts), 12 AMP (1440 Watts).

	Part Number
One Circuit	**TRK-SP-TCL1-XXX-YYY-120Z**
Two Circuit	**TRK-SP-TCL2-XXX-YYY-120Z**
One Circuit Control	**TRK-SC-TCL1-XXX-YYY-120Z**

XXX and YYY=Amps

☐ **0.5**=0.5 AMPS ☐ **1.0**=1.0 AMPS
☐ **1.5**=1.5 AMPS ☐ **2.0**=2.0 AMPS
☐ **2.5**=2.5 AMPS ☐ **3.0**=3.0 AMPS
☐ **5.0**=5.0 AMPS ☐ **8.0**=8.0 AMPS
☐ **12.0**=12.0 AMPS

Z=Paint Color

☐ **B**=Black
☐ **W**=White
☐ **S**=Silver

Raceway Cover

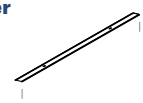

Field cuttable Raceway Covers are used to enclose additional lay-in circuit wiring in top section of track.

	Part Number
All Circuits	**TRK-S-AC-RCZZ-S**

ZZ=Length

☐ **04**=4ft Track
☐ **08**=8ft Track
☐ **12**=12ft Track

Power Receptacle Adapter

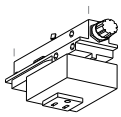

120/250V Power Receptical Adapter provides a convenient switched and fused U-Ground receptacle for power and is rated at 5A-120V. ETL listed.

Finish		Part Number
Silver	One & Two Ckt	**31160**
Black	One & Two Ckt	**31260**
White	One & Two Ckt	**31360**

Power Receptacle Adapter + Data Takeoff

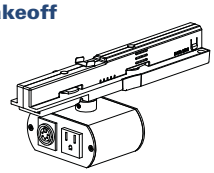

120V/250 Power Receptical Adapter with 5 pin XLR connector for data takeoff.

	Part Number
One Circuit Control	**TRK-SC-TO-120Z**

Z=Paint Color

☐ **B**=Black
☐ **W**=White
☐ **S**=Silver

Display Hook

Display Hook is used to mechanically hang an item from the track without electrifying it. Do not exceed 20 lbs. at minimum spacing of two feet.

Finish		Part Number
Silver	One & Two Ckt	**30761**

Weight Support Bar

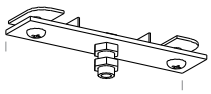

Weight Support Bar provides threaded nipple and nuts to mount an item to track without electrifying it. Do not exceed 20 lbs. at minimum spacing of two feet. Nipple size 1/8-27 NPS (.406 diameter).

Finish		Part Number
Silver	One & Two Ckt	**30762**

Track Closure Cover

Field cuttable Noryl Track Closure Covers are used to enclose the open face of the track, and simply snap into place.

	Part Number
All Circuits	**TRK-S-AC-TCYY-Z**

YY=Length

☐ **04**=4ft Track
☐ **08**=8ft Track
☐ **12**=12ft Track

Z=Paint Color

☐ **B**=Black
☐ **W**=White
☐ **S**=Silver

SURFACE CONTROLTrack • COMPONENTS

Surface Hanger Clip

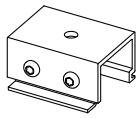

Extruded Surface Hanger Clips space track .50" (13mm) from a surface to create a floating look or when mounting to an uneven surface. For normal usage, LSI recommends two hanger clips per 4 foot (1.2m) length, two hanger clips per 8 foot (2.4m) length, and three hanger clips per 12 foot (3.7m) length. Two clips per package. ¼" diameter hole.

Finish		Part Number
Silver	One & Two Ckt	**30025**
Black	One & Two Ckt	**30225**
White	One & Two Ckt	**30325**

Flush Canopy Kit for End Feed

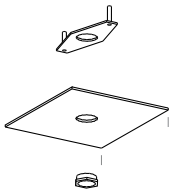

The canopy kit for End Feed is used when flush mounting track to a surface and feeding from a recessed outlet box.

	Part Number
All Circuits	**TRK-S-AC-CKE-Z**
	Z=Paint Color
	☐ **B**=Black
	☐ **W**=White
	☐ **S**=Silver

Flush Canopy Kit for Straight Joiner

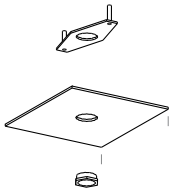

The canopy kit for Straight Joiner/Feeder is used when flush mounting track to a surface and feeding from a recessed outlet box.

	Part Number
All Circuits	**TRK-S-AC-CKJ-Z**
	Z=Paint Color
	☐ **B**=Black
	☐ **W**=White
	☐ **S**=Silver

Canopy Kit for End Feed when using Surface Hanger Clips

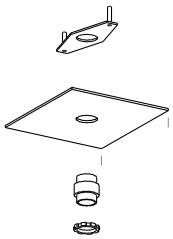

The Canopy Kit for End Feed is required when using Surface Hanger Clips to enclose wiring to track End Feed which is spaced .50 (13mm) from recessed outlet boxrecessed outlet box.

Finish		Part Number
Silver	One & Two Ckt	**30026**
Black	One & Two Ckt	**30226**
White	One & Two Ckt	**30326**

Canopy Kit for Straight Joiner/Feeder when using Surface Hanger Clips

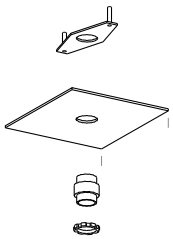

The Canopy Kit for Straight, L, T and X Joiner/Feeder is required when using Surface Hanger Clips to enclose wiring to track joiners which are spaced .50 (13mm) from recessed outlet box.

Finish		Part Number
Silver	One & Two Ckt	**30027**
Black	One & Two Ckt	**30227**
White	One & Two Ckt	**30327**

SURFACE CONTROLTrack • INSTALLATION INSTRUCTIONS

IMPORTANT SAFETY INSTRUCTIONS - For use with CONTROLTrack System Only

When installing or using this track system, basic safety precautions should always be followed, including the following: **Read all instructions.** Do not install this track in damp or wet locations. Do not install any part of the track system less than five feet from floor. Do not install any fixture assembly closer than six inches from any curtain or similar combustible material. Disconnect electrical power before adding to or changing the configuration of the track. Check with a qualified electrician. Do not attempt to energize anything other than lighting track fixtures on the track. To reduce the risk of fire and electric shock, do not attempt to connect power tools, extension cords, appliances and the like to the track. Do not connect a track to more than one branch circuit unless the track is constructed so it can be used with more than one branch circuit. Check with a qualified electrician. Although the track lighting system may seem to operate acceptably, a dangerous overload of the neutral may occur and result in a risk of fire. Install per NEC and local codes. **SAVE THESE INSTRUCTIONS**

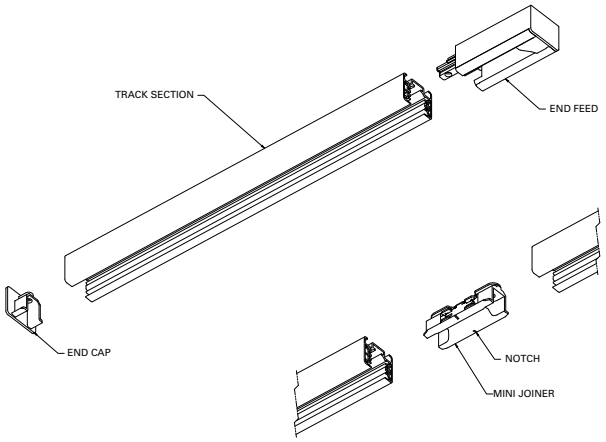

Assembling

Insert End Cap, End Feed or any other Joiner/Feeder completely into Track Section and tighten the recessed Phillips head screw. Do not use excessive force when inserting components into Track Section.

Note: Insert Mini Joiner into track up to centering notch.

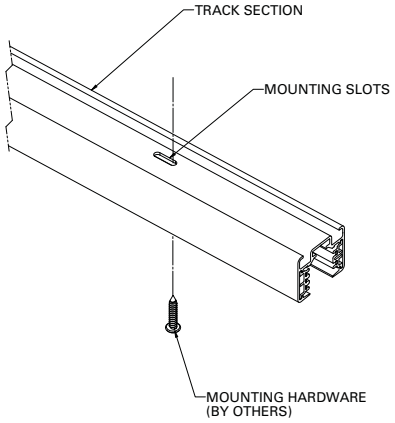

Mounting

Fasten track directly to surface through pre-punched mounting slots with hardware (by others) capable of withstanding a 50 lb. pull. Mount track in compliance with NEC Lighting Track Article #410-101 (Installation), #410-104 (Fastening) and any other applicable codes. To prevent distortion of the track opening which may prevent insertion of fixture fittings, do not over tighten mounting screws. LSI recommends a minimum of two mounting points per section of track. LSI CONTROLTrack can be mounted on centers up to 6'- 0".

LSI CONTROLTrack can also be mounted by surface hanger clips, stems, or cables on centers up to 6' 0". LSI recommends a minimum of two mounting points per section of track. Pendant mounted track intended to be installed by stems only are not to be mounted by cable.

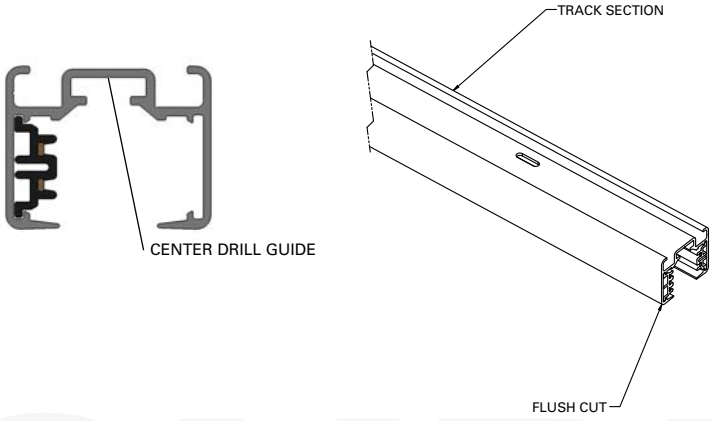

Field Cutting

LSI CONTROLTrack can be easily field cut using a sharp hacksaw or a chop saw with a blade for non-ferrous metals, such as Oldham commercial carbide series metal blade. Together, cut the aluminum track, track liner, and copper with one straight cut. All pieces must be exactly the same length. Be sure to remove any burrs on the aluminum or the copper as this may affect the electrical and mechanical interconnection of components to track. Do not cut track to less than one foot in length.

LSI CONTROLTrack can easily be field drilled by using the drill guide and a 3/16" drill bit. Be sure to remove any burrs after drilling. A single section of track that is 4 feet (1.22 m) or less in length is to be provided with one mounting opening spaced a maximum of 6 inches (152.4 mm) from each end of a track section. Additional openings may be provided. A single section of track that is greater than 4 feet (1.22 m) in length is to be provided with a mounting opening spaced a maximum of 12 inches (300 mm) from each end of the track section with additional openings being provided a minimum of every 6 feet (1.83 m) along the length of the track section.

SURFACE CONTROLTrack • INSTALLATION

Electrical

Remove the Lexan™ cover from any End Feed or Joiner/Feeder, bring wires through the combination 1/2, 3/4 U.S. trade size knock-out (.875 diameter [22mm], 1.125 diameter, [29mm]) in conduit plate and attach conductors to identified terminals on connectors. Joiner/Feeders can be electrically field modified by switching connector location. #12 THHN wire for Power and #18 THHN wire for data is the suggested size of wire.

L = Line
N = Neutral

= Ground

Data Connections
#1 = DMX Common or 0-10V Common
#2 = DMX -, Dali -, or 0-10V + (zone 1)
#3 = DMX +, Dali -, or 0-10V + (zone 2)

NOTE:
ALL SUPPLIED CONNECTORS MUST BE INSTALLED EVEN IF NOT BEING WIRED.
FOR 1 CIRCUIT POWER ONLY A BLANK CONNECTOR MUST BE INSTALLED ON THE SIDE OF THE TRACK WITHOUT A TRACK LINER/BUSBARS.

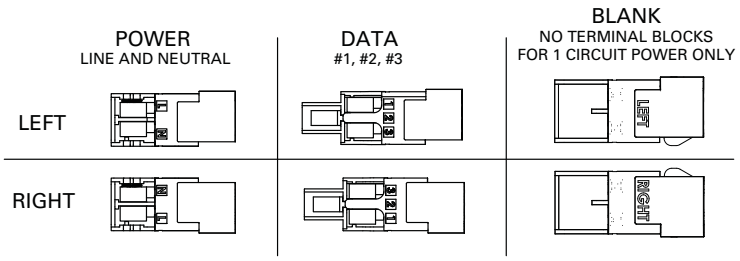

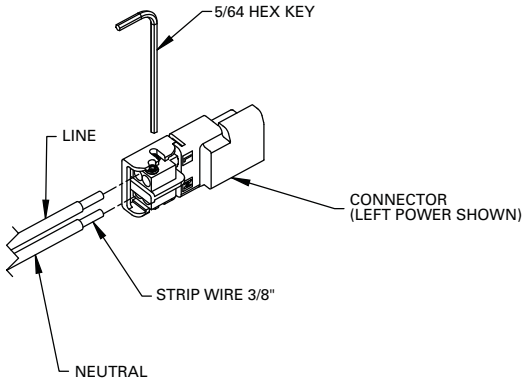

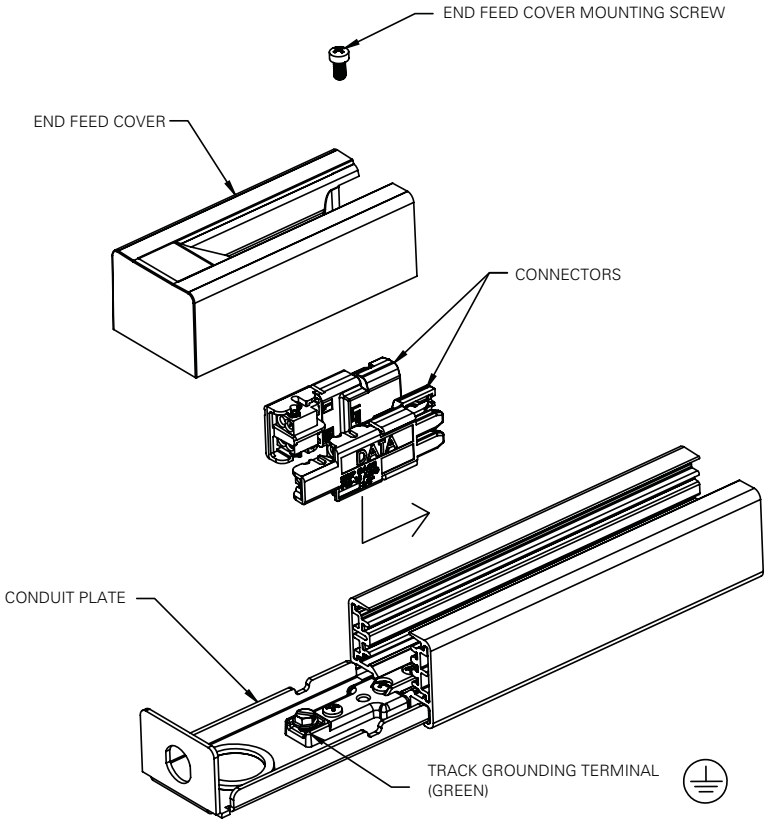

SURFACE CONTROLTrack • INSTALLATION

Supply Connection Wiring Diagram

Voltage = Single Phase 120V or 277V AC
Maximum Current = 20A per circuit Supply
Cable = 5 x 12 Gage THHN wire
CAUTION: Data MAX 30V, 2A

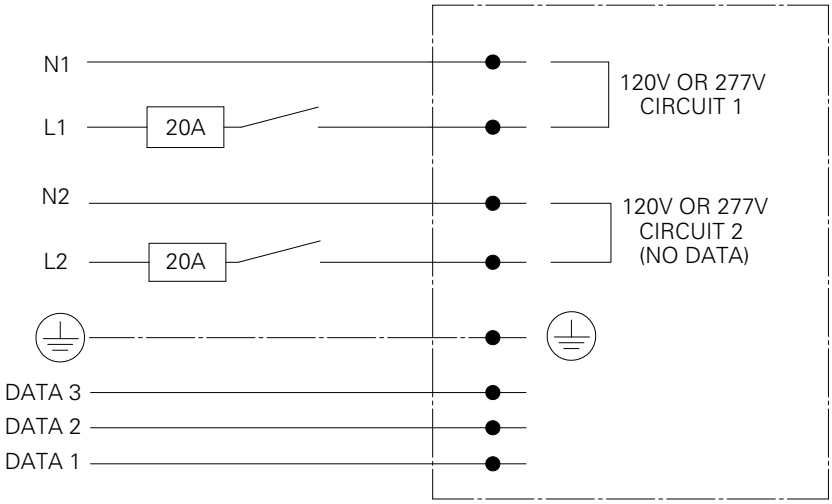

Additional Circuits

LSI Track has integral wiring channels for six additional #12 THHN wires to create three additional 20 amp circuits with separate neutrals or extra data wires. Place conductors in wiring channels and slide raceway covers into track prior to mounting.

DO NOT install power and data wires in the same raceway channel.

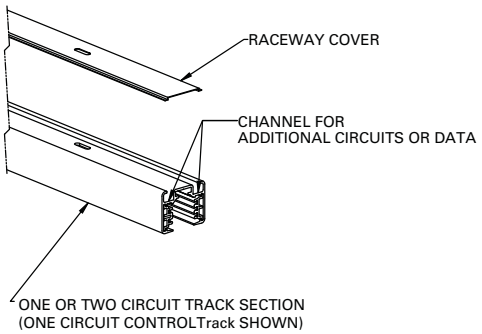

Installing LSI Fixtures

LSI ControlTrack Series track is only to be used with LSI electrical fittings listed below:
-00
-0E
-CT
-LT

To insert a fixture fitting into the track, the switch must be in the “off” position, with the power handle open. Insert the fixture fitting straight up into the track until it seats evenly, close handle completely, switch on. If using CONTROLTrack, a second data handle will also need to be turned counterclockwise.
If using one circuit track or CONTROLTrack, make sure that the brass contacts which protrude from the side of the fixture fittings are inserted facing the copper busbars. For CONTROLTrack, handles will not engage if installed backwards. If using two circuit track, inserting the fixture fitting in one direction will connect to circuit one. Removing and reversing the direction of the fitting will connect to circuit two.

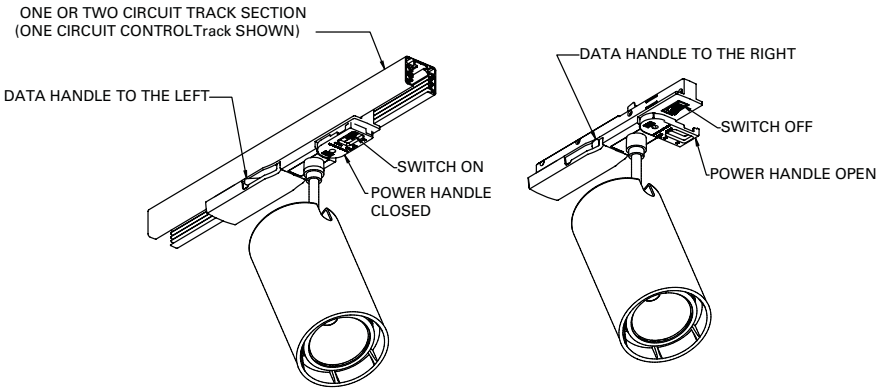

SURFACE CONTROLTrack • WIRING DIAGRAM

Diagrams apply to Surface Track

CONTROLTrack

CIRCUIT 1
CIRCUIT 2 OR DATA (IF APPLICABLE)
Ground

End Feed

Left

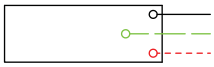

Right

Straight Joiner/Feeder

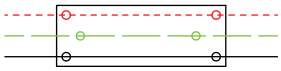

Rotated 180°

Notes:
All diagrams shown are installed view, not RCP. Except as noted, all modifications can be done simply and quickly on the job by rearranging the supplied connectors.

SURFACE CONTROLTrack • DATA GUIDELINES

GENERAL

- CAUTION: Data lines only for low voltage, 30V 2A
- CAUTION: Data and Power may need to be installed into separate feeds to prevent unstable data transmission. AC voltages may induce interference on low voltage wiring when ran in the same conduit. Analog is more susceptible than digital communication.
- Shielded pair cable is suggested for data runs with shielding grounded to earth at the controller.

DMX

- DMX wiring must be installed to standard protocols (DMX-512A (ANSI E.1.11) or data transmission may become unstable.
- Maximum number of DMX fixtures on a single data run is 32.
- Maximum number of RDM fixtures on a single data run is 20.
- No loops, 'Y's, or stars in the DMX data path that would disrupt data transmission.
- Each DMX data run needs be terminated with a 120-ohm resistor or the use of a mini terminator
- Each DMX run should not exceed 1000ft.
- DMX cable should meet RS485 standard.

0-10V

- One or Two 0-10V control zones may be installed in single track run. Common wires can be connected together at feed.
- Maximum fixtures quantity depends on the capacity of the controller.
- It is best to limit the length of 0-10V (analog) wiring to 300ft on 18ga wire.

Dali

- Dali wiring must be installed to standard protocol (IEC 62386) or data transmission may become unstable.
- Maximum number of DALI fixtures on a single data run is 64.
- Loops in the DALI data path are NOT allowed. Y's and branches are allowed.
- DALI data run should not exceed 1000ft.

Lutron EcoSystem

- Maximum number of EcoSystem fixtures on a single data run is 64.
- Loops in the EcoSystem data path are NOT allowed. Y's and branches are allowed.
- EcoSystem data run should not exceed 570ft on 18ga wire.

Data Terminal Wiring Scheme

Data Terminal	DMX	0-10V	Dali	EcoSystem
1	Common	Common	N/A	N/A
2	-	+, Control Zone 1	-	-
3	+	+, Control Zone 2	+	+

Lighting Services Inc

2 Holt Drive
Stony Point NY 10980-1996
Tel: +1 (845) 942-2800
Fax: +1 (845) 942-2177

www.LightingServicesInc.com

09/18